City of Marshfield, Engineering Division

Public Informational Meeting

for

2020 Mill-in-place

2020 Construction

Engineering Division Contacts

Tom Turchi
City Engineer

Tim Cassidy
Assistant City Engineer

Josh Mauritz
Civil Engineer II

James Perton
Civil Engineer I

Lance Oldham
Engineering Tech II

Shawn Miller
Engineering Tech II

Phone: (715) 486-2034 - Web Site: ci.marshshfield.wi.us - tom@ci.marshfield.wi.us

Street Division Contacts

Kris Hawley
Acting
Street Superintendent

Kurt Bornbach
Assistant Street
Superintendent

Assistant Street
Superintendent

Phone: (715) 486-2081 - Web Site: ci.marshfield.wi.us

City of Marshfield, Engineering Division

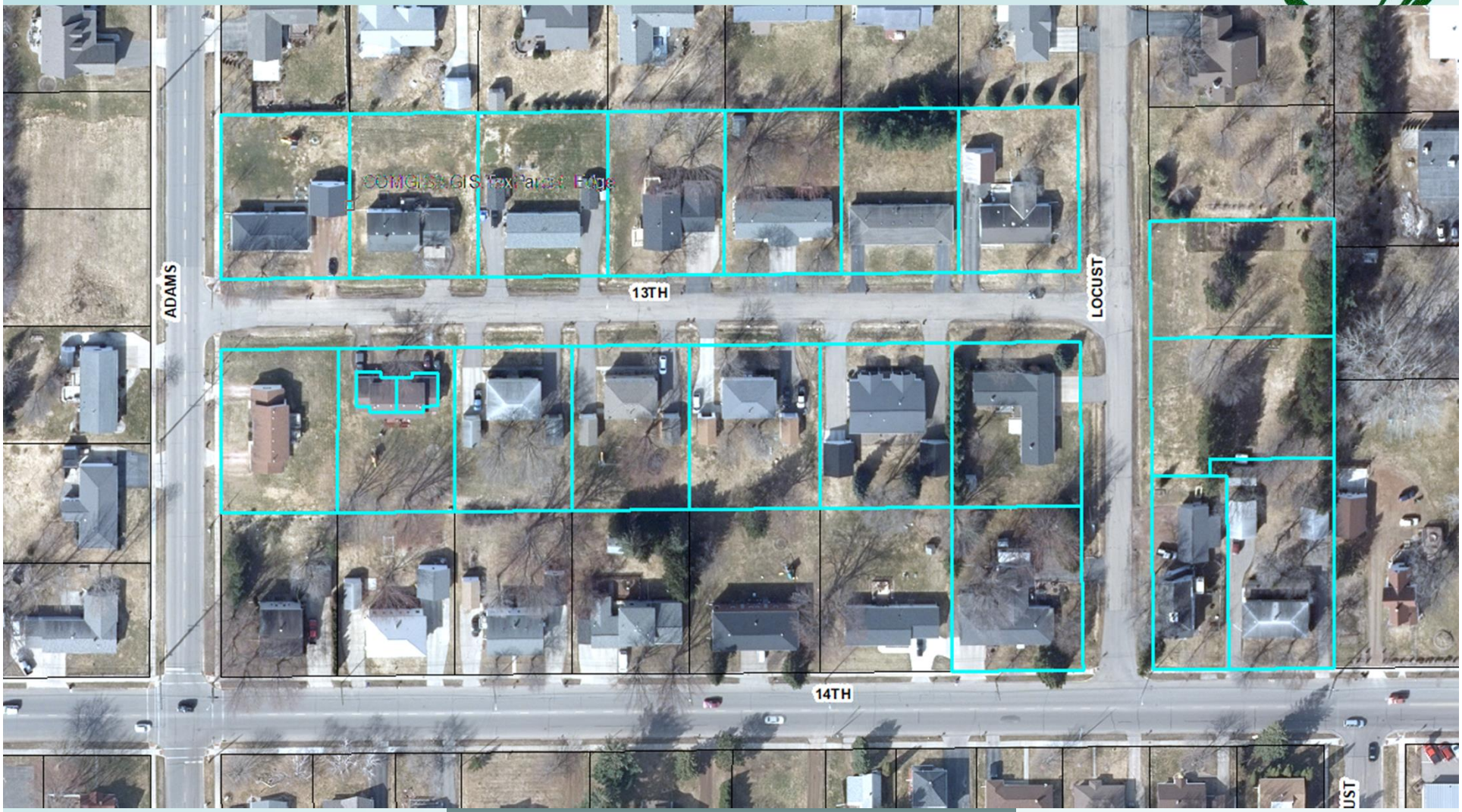

312216

13th Street (Adams Ave. to Locust Ave.)

Locust Avenue (13th St. To 14th St.)

City of Marshfield, Engineering Division

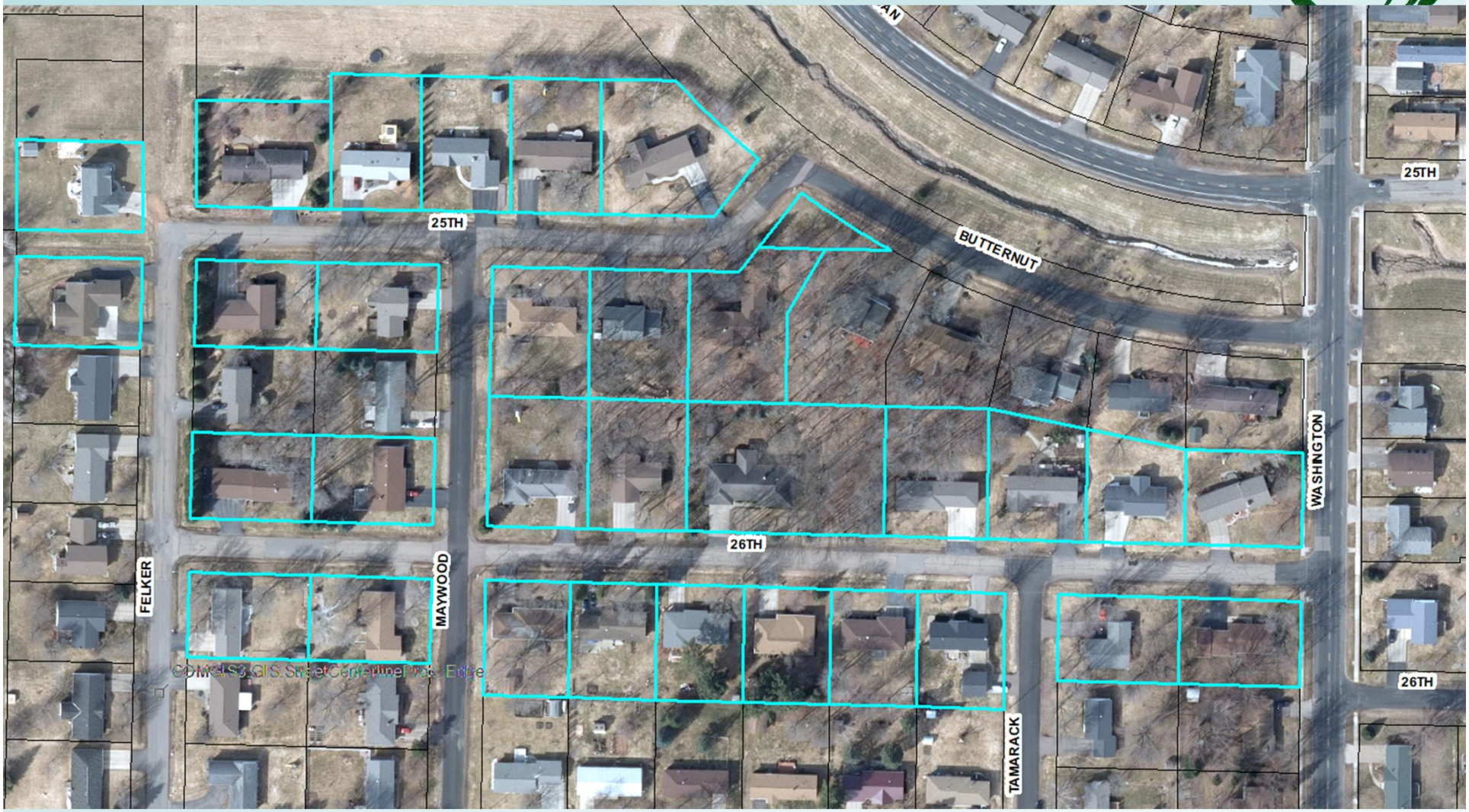

312216
25th Street (Felker Ave. to Butternut Pkwy.)
26th Street (Felker Ave.to Washington Ave.)

City of Marshfield, Engineering Division

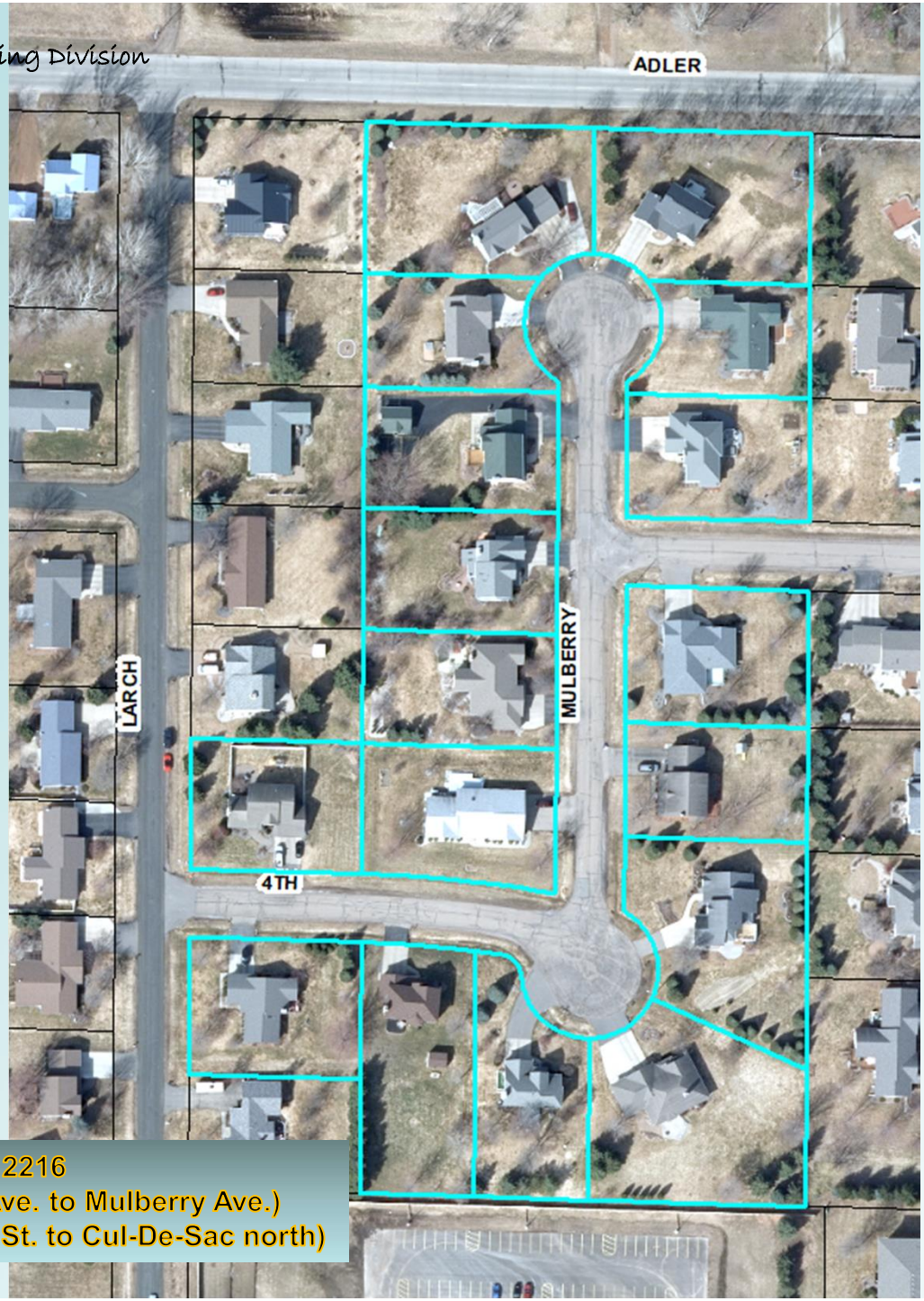

312216
4th Street (Larch Ave. to Mulberry Ave.)
Mulberry Avenue (4th St. to Cul-De-Sac north)

City of Marshfield, Engineering Division

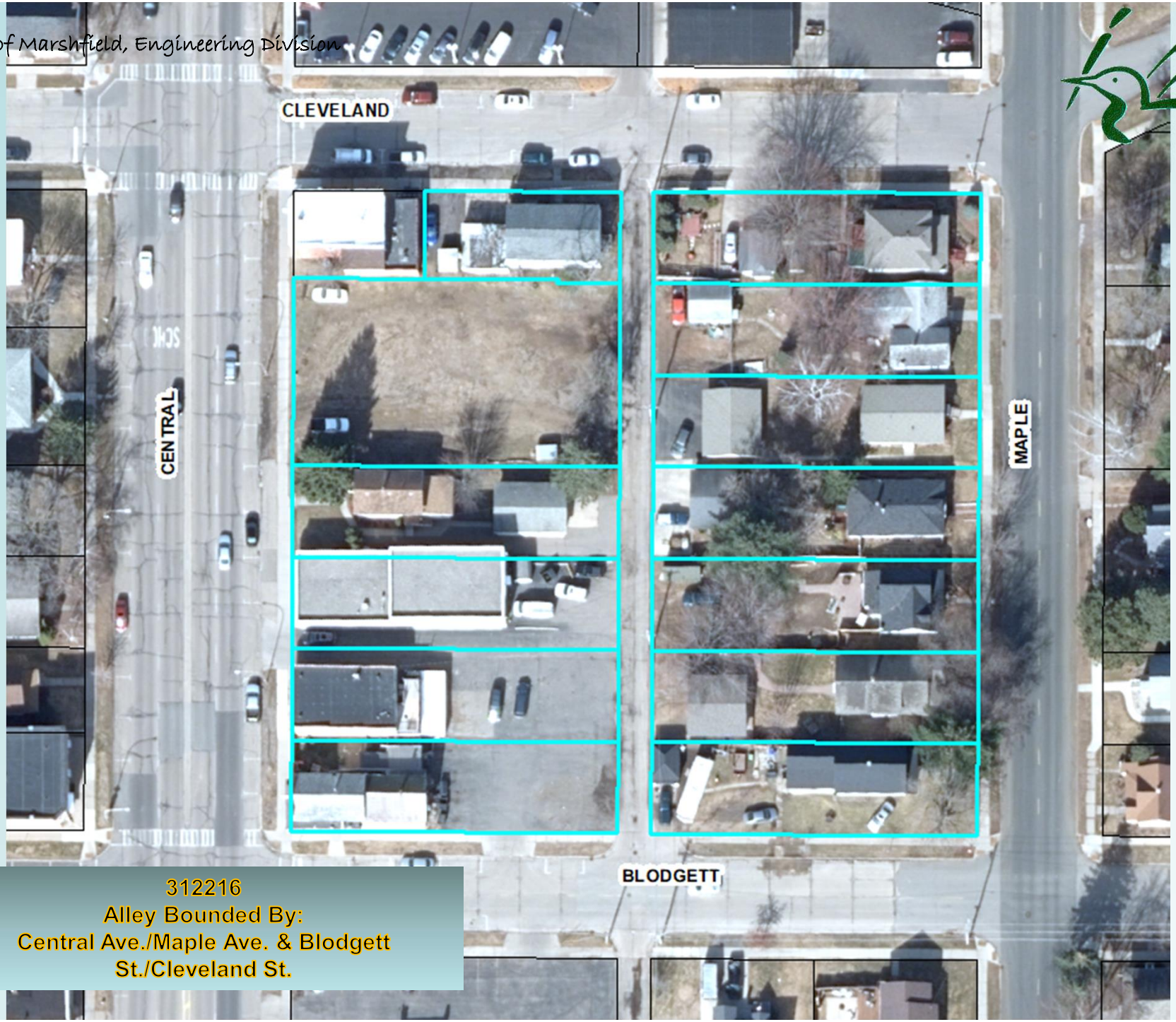

312216
Alley Bounded By:
Central Ave./Maple Ave. & Blodgett St./Cleveland St.

City of

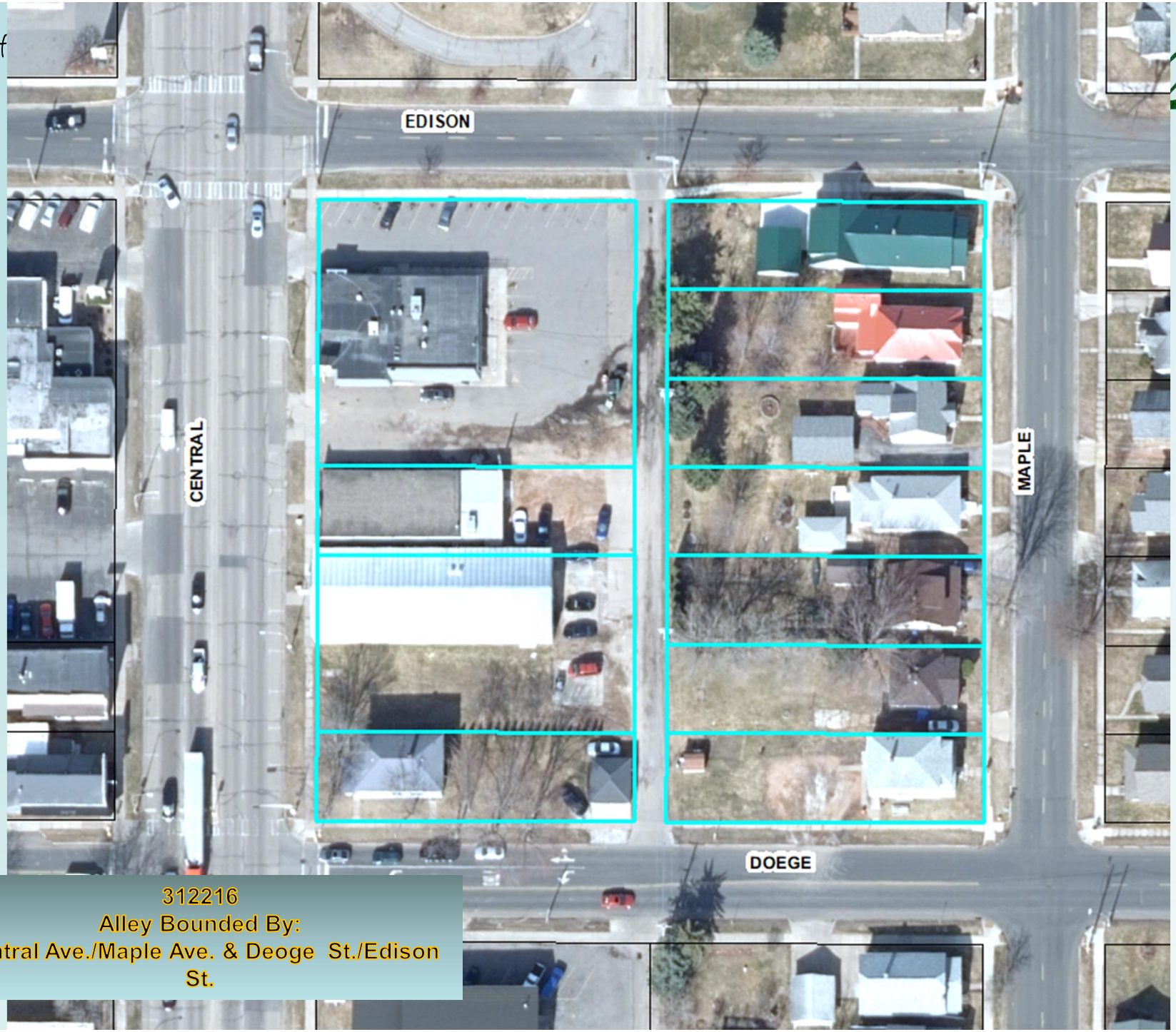

312216
Alley Bounded By:
Central Ave./Maple Ave. & Deoge St./Edison St.

Typical Progression of Events

- Ditching & Underdrain

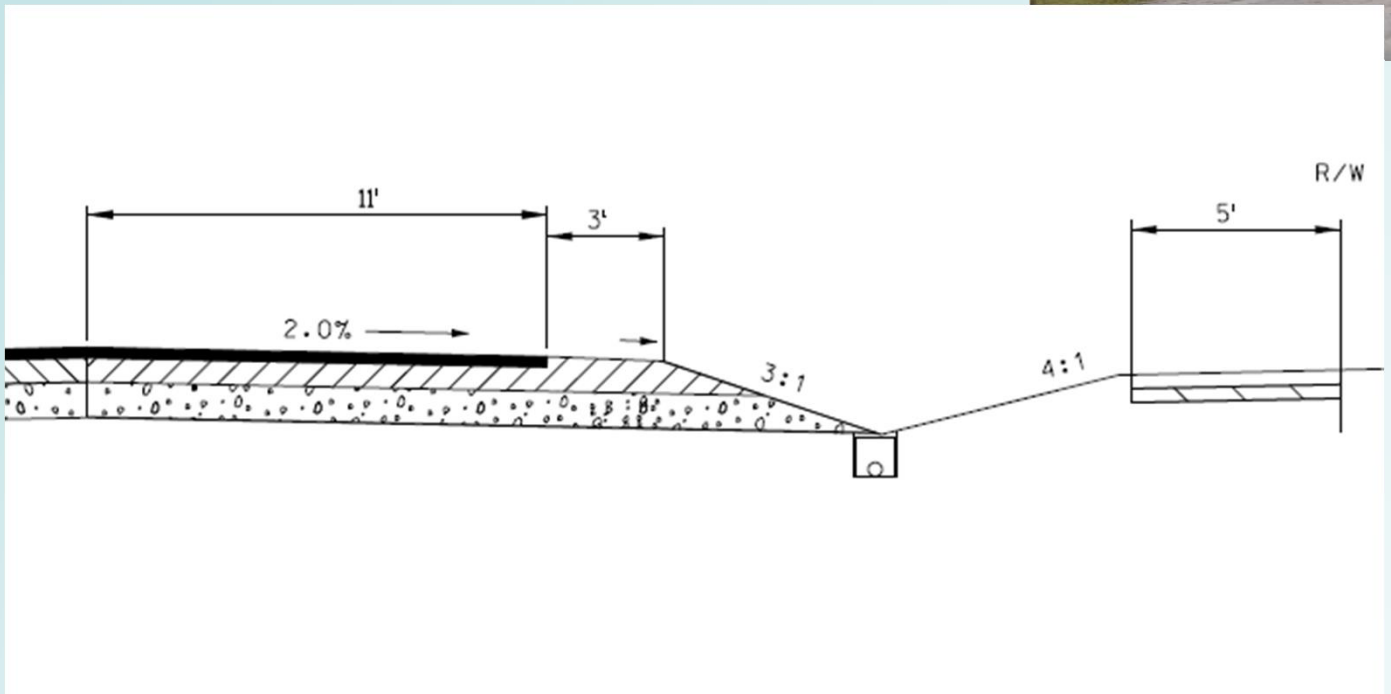

CURB STOPS

- Marshfield Utilities – Service rules state that the Curb Box belongs to the property owner.
- If the top of the Curb Stop is higher than the ditch it is up to the homeowner to make adjustments to the height if they so choose.
- If the Street Division Damages the **Curb Stop** while doing our work we will repair it.
- Ash Avenue & 26th Street – Curb Stops will be installed where there are none.

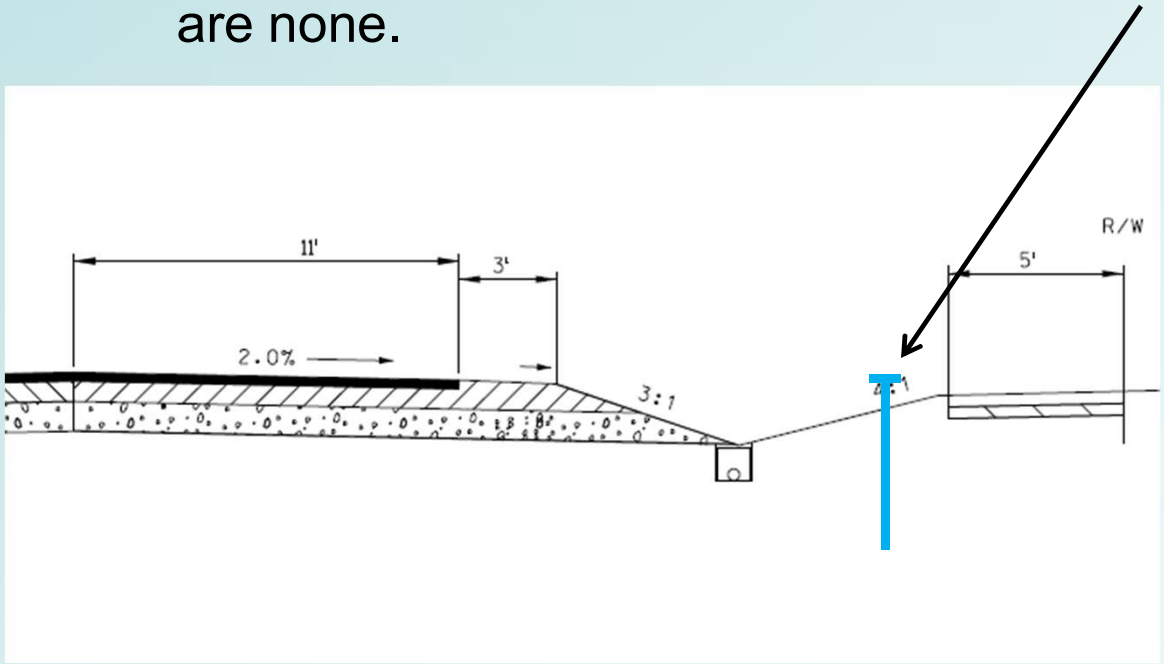

Typical Progression of Events

- Ditching & Underdrain

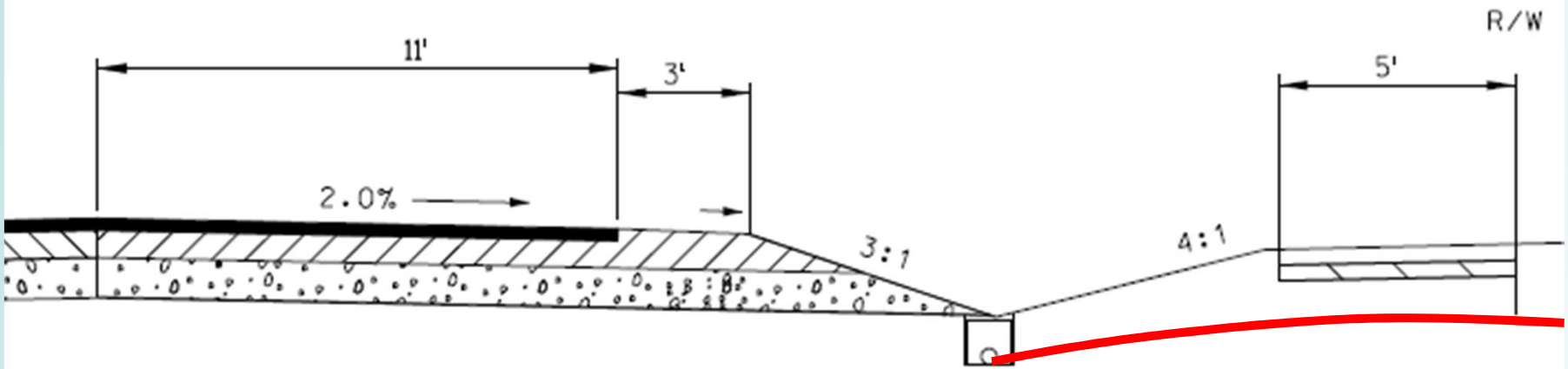

Please note: we can connect sump pump drains to the under drain system but, downspouts and yard drains can not be connected to the under drain as these will exceed the capacity of the system and the debris from these types of drains will plug the under drain.

Typical Progression of Events

- Pulverizing

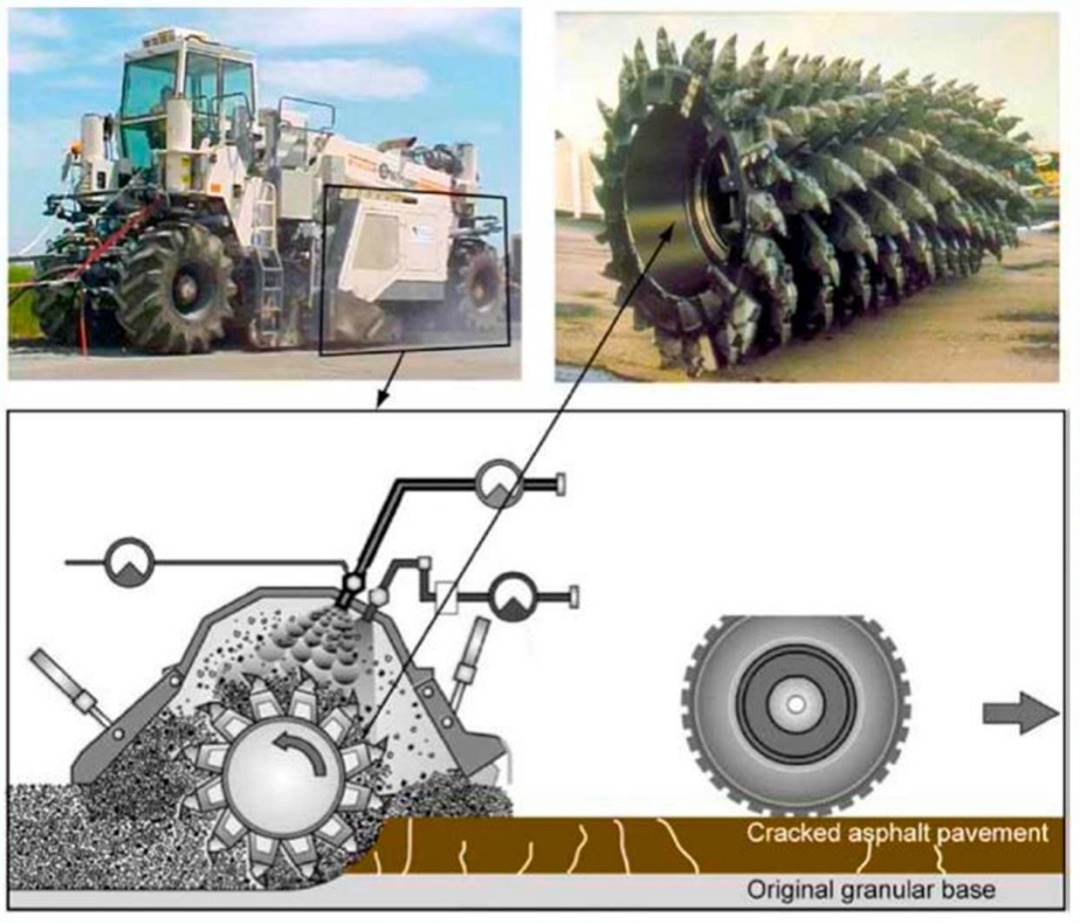

Typical Progression of Events

- Grading & Compacting

Typical Progression of Events

- Raise / adjust manholes

Typical Progression of Events

- Asphaltic Paving

Typical Progression of Events

- Shouldering

Construction Schedule

- Kurt Bornbach, Assistant Street Superintendent
  - *Kurt is the person with the answers for the MIP project* ***schedules***

- Ditching and under-drain construction
- Pulverizing – this is based upon the schedule of equipment.
- Adjust manholes.
- Prepare for paving – sometime in August before school is in session.
- Shouldering following the paving – August / September

- Both - Pulverizing and Paving are extremely fluid schedules. We typically know about one to two weeks ahead of time for their schedule. Even then the schedule can be disrupted very easily if it rains.
- Door hangers are typically used to notify residents of forthcoming work such as Milling and Paving.

Sequence of Events

- Adoption of budget (November).
- Survey (August / September).
- Initial PIM (Feb).
- Preliminary resolution (January).
- Design
- Mail Special Assessment information (April) –
  - Notice of public hearing.
  - Installment assessment notice.
  - Report of the City Engineer.
  - Schedule ‘D’ including estimated special assessments.
- PIM – 90% Design & Special Assessments.
- Final Plan Review.
- Construction begins.
- Create final special assessments (next January).
- Mail final special Assessments (next March).

Access Considerations

- We would like to know if you or your neighbor may require special access during construction due to a disability.
- Do you or your neighbor receive meals on wheels or other services that should be considered during the design process.
- Our goal is to try to be accommodating as possible during construction. (please note access can not be maintained at all times)
- Parking during construction will be allowed on the side streets when access is restricted for the paving of the new surface. This may result in a day or so without driveway access. Typically during culvert replacement and underdrain installation access may be effected for about 4 hours.

How are services are affected during construction

- **Mail** - The post office will continue providing mail service as normal.
- **Trash & recyclables** – Garbage services will be able to provide service as normal. If disruption occurs the Street Division will work with Advanced Disposal to address the disruption.
- **Water** – This service will not be affected during construction. On Ash Avenue and 26th Street short service disruptions can be expected for Curb Stop instillations as necessary.
- **Sanitary** - Sanitary sewer service will not be affected during construction. If you have had issues with your sanitary sewer lateral this would be an appropriate time to make any repairs necessary prior to final paving. I will go through the City's sanitary sewer lateral replacement program.
- **Parking** – Access to your driveway for the mill in place process is only disrupted when resetting or replacing your driveway culvert and while placement of the asphalt pavement. Allowing the asphaltic pavement to cool properly will help in preventing ruts and marring of the surface.
- **Emergency services** – Our office continually updates the City's emergency services to road closures, construction sites and locations of restricted access.

What can you do to prepare for the project?

- Begin financial planning for the assessment.
- Coordinate landscaping, driveway replacement and other construction plans you may have.
- Now would be the opportune time to lengthen a driveway culvert during the construction process. Please note the maximum length allowed by city policy is 40 feet.
- Ask questions; inform staff of your concerns.

Funding

- **Street**
  - Pulverizing and paving are assessable items
  - Assessments are based upon the ordinances 1/3, 1/3, 1/3.
  - 1/3 of the cost for pulverizing and asphalt paving assessed to the homeowners on one side, 1/3 is assessed to the other side of the street and the remaining 1/3 is funded by general tax dollars.

- **Driveway aprons**
  - Are assessable.
  - Driveways are paved as follows:
    - Gravel Aprons will be restored in asphalt.
    - Asphalt aprons are restored in asphalt.
    - Concrete or brick paver aprons are restored in asphalt.
    - Please note special end wall treatments are not replaced. It is the responsibility of the property owner to remove and replace these end wall structures on their own.
    - Existing Driveway Aprons are graded and a credit is applied towards the new asphalt.

– Gravel	Poor	No Credit
– Asphalt Cracked	Average	50% Credit
– Asphalt no cracks	Very Good	80% Credit
– New Asphalt	New	100% Credit

Funding

- **Ditching**
  - Is not assessable.
  - This includes the installation of the under drain.
    - Sump Pumps can be connected to the underdrain system.
    - Downspouts and other types of yard drains can not be connected.

- **Culverts**
  - The property owner is responsible for the cost associated with the lengthen or replacement of their specific culvert pipe. In some instances if the culvert has no rust holes or is fairly new replacement may not be necessary.

  - The City will be supplying the replacement culverts for the mill-in-place projects for those culverts requiring replacement. Costs for the culvert has been added to the special assessments for the road. If the culvert does not require replacement the cost for the culvert will be removed.

    - Culverts will be typically HDPE or dual wall black plastic. If the homeowner requests a metal culvert please provide a written request for a metal pipe and we will make the proper arrangements.

Dual Wall HDPE

Please note if a HDPE (plastic) culvert is used a crack may still return as there is some flex in these plastic culverts.

Galvanized Corrugated Metal Culvert Pipe or Aluminum Culvert Pipe

Sanitary Sewer Lateral Replacement Policy

- Now would also be a good time to review the condition of your sanitary sewer lateral.

- The City will televise your sanitary sewer lateral at no cost to the homeowner.
  - Access to the cleanout is necessary
  - If you have had root problems in the past they will need to be removed before the televising can be effective.

- Addressing your sanitary sewer lateral now can save a road cut in the future which in turn helps with the longevity of the new roadway.

- The City has implemented a incentive for lateral replacements. **I will discuss this later in more detail. (Updated for 2019)**

- To schedule the televising please contact the Marshfield Wastewater Treatment Plant at (715) 486-2007.

City of Marshfield, Engineering Division

Sanitary Sewer Service Replaces as a part of this project

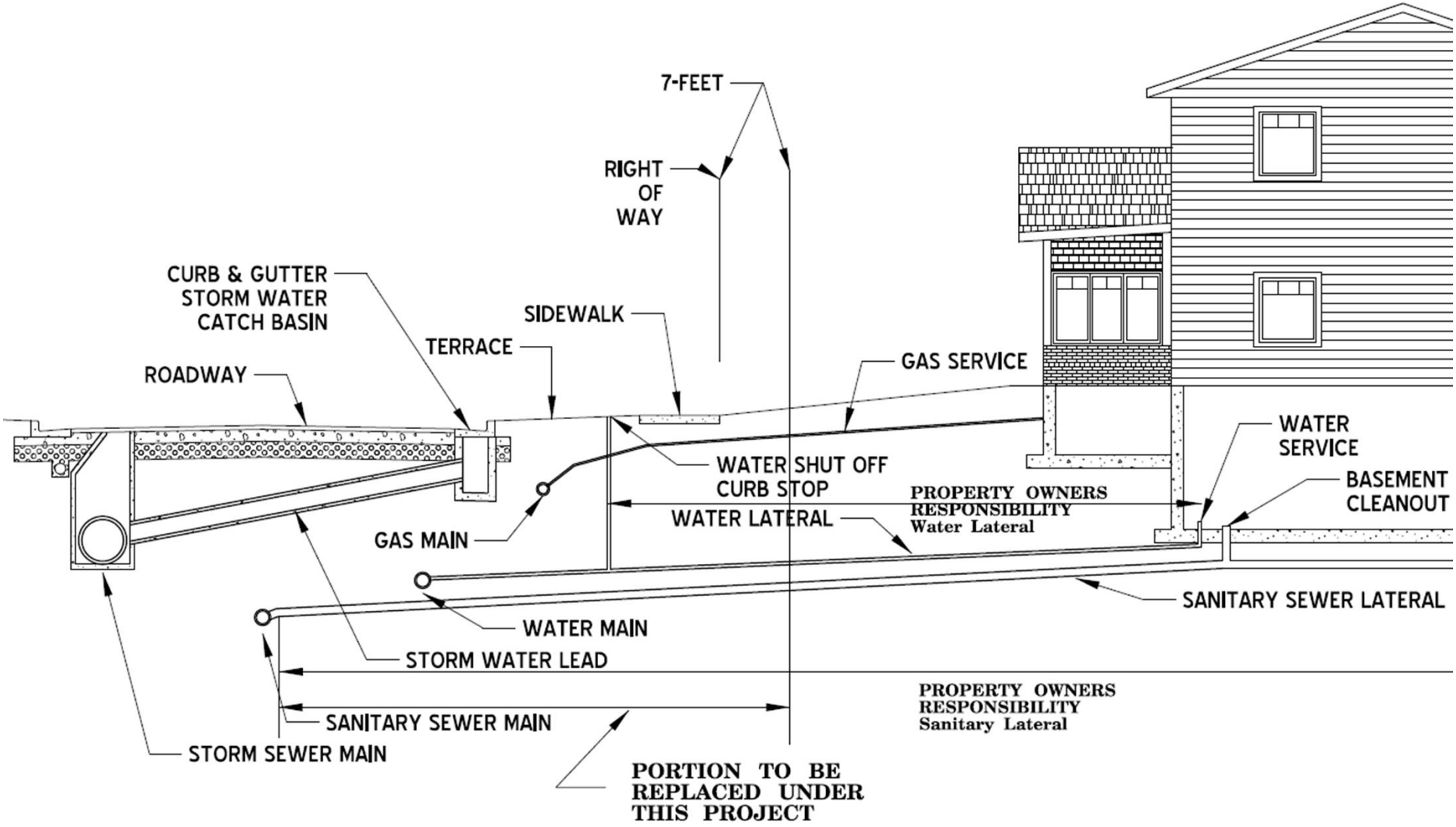

Current Policy for Sewer Lateral replacement

The City will issue a check for $ 1,000.00 as part of the incentive prior to paving

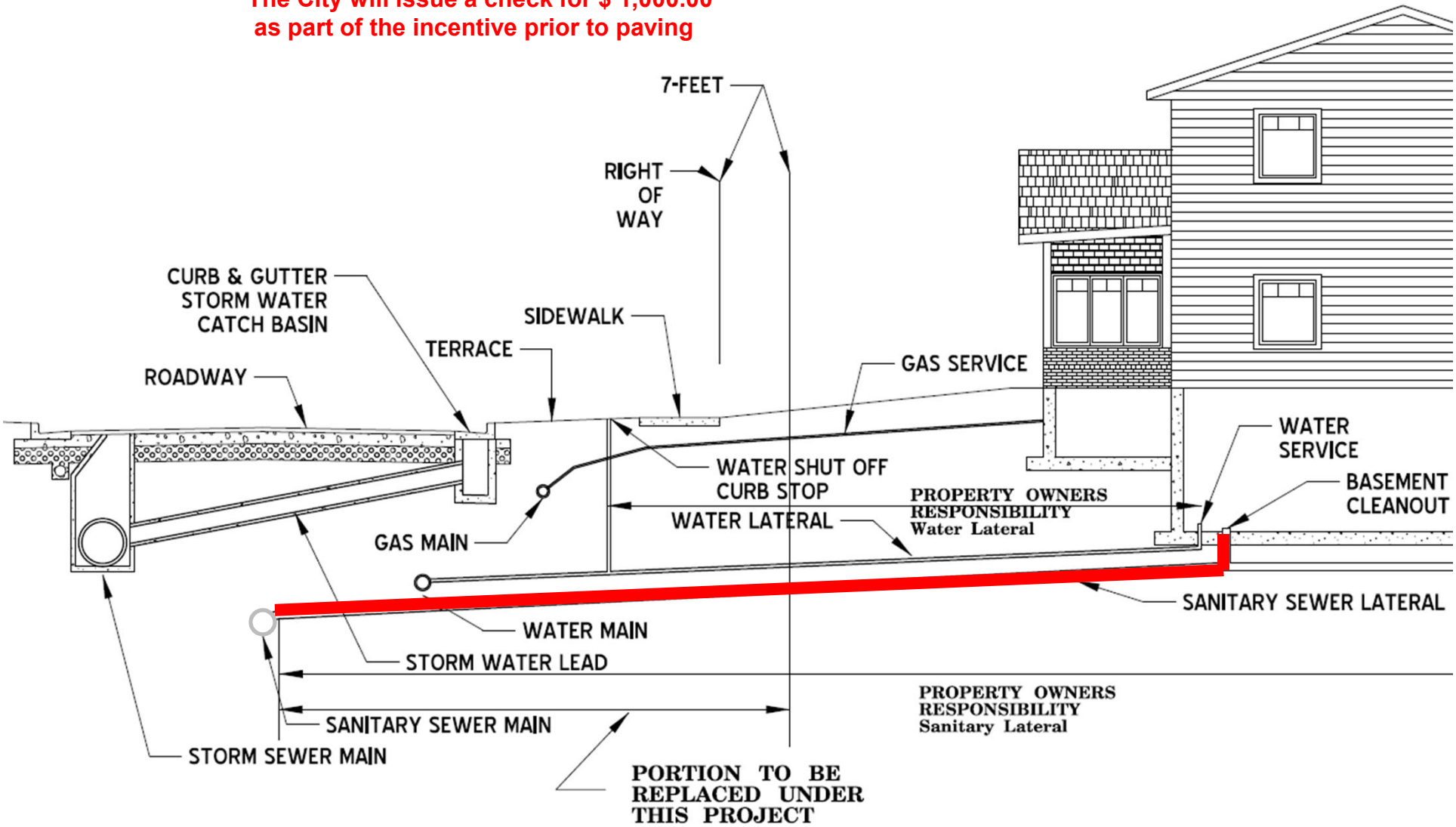

Special Assessment Payment Options

- **Estimated**
  - The estimated special assessments will be calculated and mailed prior to the start of construction but after bids have been opened for asphalt paving.

- **Final**
  - Final assessments calculated in early 2021 and mailed out in March of 2021.

- **Payment Options**
  - Pay the entire amount 60 – days from date delivered (note this will not occur until 2021).

    - $ 0 to 500 — One (1) year
    - $ 501 to $ 5,000 — Ten (10) years
    - $ 5,001 and Greater — Twenty (20) Years

  - Assessments placed on the tax roll at the time frame noted above will be charged interest per the common council. Typically 1.5% over the interest rate for that years borrowing which has been set at 4.21% for 2019 projects.
  - The instalment assessment notice you will receive will have the specific information about the interest rate.

Example of how Special Assessments are calculated

- **Frontage**
  - The this is the actual front measurement of the parcel.
- **Sideage**
  - If the parcel is a corner lot the side measurement is prorated to 50% the front foot rate for residential properties and 75% the front foot rate for all other uses..
- **Culvert**
  - The actual cost for the culvert used will be assessed to property owner.
- **Example shown**
  - Frontage is 110 linear feet
    - 110 * 15 = $ 1,650
  - Sideage is 130 linear feet
    - 130 * 15 * .5 = $ 975
  - Culvert 12 – inch diameter 30 feet long
    - 30 * 12 = $ 360
  - Assume both the front and side are being milled.
    - Total Special Assessment for street work = $ 2,985
  - ***This Assumes the front foot rate of $15.00 / Linear Foot***

Example of how Special Assessments are calculated

- **Driveways**
  - I will provide several examples to show how this gets assessed.
- **Original Area of Asphalt Apron**
  - 25 SY (Square Yards) in Average condition
- **Example shown**
  - If new apron is the same area then.
    - 25 SY * $ 30.00/SY = $ 750
  - Average Credit = 50%
    - $ 750 * .5 = $ 375 assessment for apron
  - Assume the driveway is widened at the request of the owner. And the new area is 30 SY.
    - 30 SY – 25 SY = 5 SY new – 5 SY * $ 30/SY = $150
    - $ 375 + $150 = $ 525 final Apron cost
  - ***This Assumes the asphalt rate of $30.00 / Square Yard***
  - Taking in the street costs from the previous page the final assessment would be as follows:
    - Frontage Sideage Culvert Apron = Total Assessment
    - $ 1,650 + $ 975 + $ 360 + $ 525 = $ 3,510

Information we need from you the Resident

- Items not located by Diggers Hotline such as the items Listed below:
- Sump pump discharge service line – Is your discharge already buried and where is it located.
- Private underground utilities - Buried irrigation systems and pet containment. Buried underground power (owned by homeowner).
- Issues that you believe should be reviewed in the design process.
- Miscellaneous items or issues that should be addressed in design which could effect construction.

How can you give input and stay informed?

- tom@ci.marshfield.wi.us
  - Drop us an email
- (715) 486-2034
  - Call us; office hours are 7:30 a.m. to 4:30 p.m.
  - Schedule an appointment.
- City of Marshfield, Engineering Division, 207 W 6th St.
- Stop by the office; office hours are 7:30 a.m. to 4:30 p.m.
- City of Marshfield, Street Division, 407 W 2nd St.
  - (715) 486-2081; office hours are 7:30 a.m. to 4:00 p.m.
- www.ci.marshfield.wi.us
  - Visit the city's website.

Engineering Division Contacts
Thank You for Attending
Any Questions?

ENGINEERING DIVISION

- Tom Turchi, City Engineer
- Tim Cassidy, Assistant City Engineer
- Josh Mauritz, Civil Engineer II
- James Perton, Civil Engineer I
- Lance Oldham, Engineering Tech II
- Shawn Miller, Engineering Tech II

STREET DIVISION

- Kris Hawley, Acting Street Superintendent
- Kurt Bornbach, Assistant Street Superintendent
- Vacant, Assistant Street Superintendent

- Phone: (715) 486-2034 Engineering (715) 486-2081 Street
- Web Site: ci.marshshfield.wi.us