ADDENDUM NO.1

CITY OF MARSHFIELD
CONTRACT 2013-01

Issued March 19, 2013

This amendment to the Contract, Plans and/or Specifications is issued to modify, explain or correct the original Contract, Plans and/or Specifications, and is hereby made part of the Contract Documents. Bidders shall acknowledge receipt of Addendum(s) on the 'Proposal For Contract 2013-01' form.

Note: The Bid Date (Monday, March 25, 2013) and all other parameters (such as prequalification, bid received time, bid opening time, locations, etc.) are unchanged.

****

STANDARD SPECIFICATIONS

The City of Marshfield's 2013 Standard Specifications for Public Works Construction, referred to as the Standard Specifications, were not provided as part of the original project documents via 'QuestCDN'. These Standard Specifications are available via the City of Marshfield website at the addresses/links listed below. The Contractor shall access this Contract Document, and/or download/print a copy via said links, and utilize the document for preparation of the bid and thereafter the construction of the project.

- City of Marshfield Website: http://ci.marshfield.wi.us/ Under 'City Departments' (left side of webpage) click on 'Engineering', then click on 'Project Bidding', then click on 'Standard Specification of Public Works Construction Document'.
- Direct link to Standard Specifications: http://ci.marshfield.wi.us/engineering/handler.aspx?file_id=6793

INDEX (for Special Provisions)

An Index for the Special Provisions was not included with the original Special Provisions. An Index for the Special Provisions is hereby provided with this Addendum, as an attachment.

PROPOSAL

Omit all pages of the original Proposal section and replace the entire section with the revised Proposal (which is noted on each page footer as "Revised 3/19/13 per Addendum No. 1). In general, this revision corrects and/or adds items, units and/or quantities.

CONTRACT

Omit all pages of the original Contract section and replace the entire section with the revised Contract (which is noted on each page footer as "Revised 3/19/13 per Addendum No. 1). In general, this revision corrects and/or adds items, units and/or quantities.

SPECIAL CONDITIONS

{SC 7} UTILITIES, H. Natural Gas; *Add the following supplemental information to this section:*
The Contractor is hereby notified that the existing 6-inch steel gas main pipes on Chestnut Avenue and 5th Street are wrapped with an asphaltic material which may include asbestos. We Energies will sample and test this 'wrap' to determine if asbestos is present, however the results will not be available prior to the bid opening.

The existing gas main pipes shall be removed by We Energies (if replaced by new gas mains) where said pipes are known to be in conflict with proposed storm sewer and/or subgrade excavation. Locations generally include within all intersections (except at 5th Street where removal will only occur at the bump-outs), STA 14+50 to 5th Street, and STA 25+50 to 1st Street. Removal of existing gas main pipe by We Energies will occur concurrent with construction.

The Contractor will encounter and cross existing (6-inch 'wrapped' steel) gas mains during construction of this project. Do not disturb the existing 'wrap' coating. If the Contractor desires to remove an additional segment for ease of his operations then said removal shall follow appropriate safety procedures (such as wetting/removing of the 'wrap', cutting the pipe, temporarily storing the (wrapped) pipe, bulkheading the ends, etc.). We Energies shall be responsible for disposal of the removed pipe if the 'wrap' contains asbestos. All work by the Contractor regarding removal of existing gas main pipe shall be considered incidental to construction.

We Energies will be installing new gas mains (in addition to the proposed 8-inch main as discussed elsewhere) at these locations:

- Chestnut Avenue, 6th to 5th, east side, 2" PE.
- 2nd Street, east of the alley, south side, 2" PE.
- 3rd Street, east of the alley, north side, 2" PE.
- 6th Street, west of the alley, north side, 2" PE.

We Energies will abandon distribution mains at various locations, including most crossings of Chestnut Avenue.

Note: The Contractor shall be required to repair areas (concrete pavement, grass turf, etc.) disturbed by We Energies adjacent to and outside the construction limits (within 500'). All work by the Contractor will be measured and paid for in accordance with the specifications for pertinent items of work.

{SC 21} COMPACTION; *Add the following supplemental information/requirements to this section:*
The Contractor shall compact/proof roll areas where underground utility work occurred by others, including installation of new underground facilities or removal of existing facilities. This work shall be considered incidental to construction of the project.

{SC 40} CONCRETE; *Delete the original section entirely and replace with the following:*
{SC 40} CONCRETE, CONCRETE PAVEMENT AND CONCRETE PAVEMENT GAPS;
Chestnut Avenue and all side streets are intended to be quality, long-life, durable concrete pavements, with concrete supplied from an automatic batching plant and placed via slip-formed paving machines (required for all of Chestnut Avenue and each of the side streets, excluding parking lanes).

Monitoring and control of water, and the water to cementitious material ratio is essential for this construction. Quality control and management of materials, aggregate piles, trucks and equipment, by skilled operators, is necessary for the success of this project.

The design (pavement grades) includes many intermediate cross-slope changes, offset crowns, etc., as necessary to match existing features and provide adequate drainage. Cross-slopes and warps are

shown on the pavement grades plan sheets – the concrete pavement Contractor/Subcontractor's personnel (superintendent and foreman) must have copies of these plans with them when on the job site. Do not adjust the stringline if said adjustment would remove/alter a designed cross-slope/warp. The Engineer will stake every 25-feet with occasional 'break points' in between, and the Contractor shall provide stringline pins at all of the Engineer's stakes.

The Contractor shall provide temporary gaps in the concrete pavement if required for access. Gaps shall be located in conformance with the jointing plan (do not create additional joints because of a gap). Locations where gaps will be required are unknown at this time, and gaps will only be allowed/required where there are no other acceptable access alternatives. Concrete pavement at gaps, including dowels and/or tie bars, shall comply with all concrete pavement specifications. All sawing, removal, drilling, dowels, ties, etc. shall be considered incidental to this item. Concrete pavement within the gap shall be measured and paid for similar to the adjacent concrete pavement. Concrete Pavement Gaps will be measured per Each. Payment shall be made at the Contract Unit Price and shall constitute full compensation for all work and materials as described or implied herein, including but not limited to mobilization, coordination, sawing, removing, drilling, etc., and for all labor, tools, equipment and incidentals necessary to complete this item of work.

Mix Design requirements (in addition to the Standard Specifications, Section 11A(e)) shall include:

- The water to cementitious material ratio shall not exceed 0.40 (W/Cm≤0.40).

Note: This requirement applies to all concrete used on the project, regardless of the type/use or method of placement.

The concrete mix shall utilize fly ash as a replacement for Portland cement (replacement ratio in pounds of 1:1) at 20% minimum replacement, and up to 30% if approved by the City Engineer.

Use of a mid-range water reducing admixture is necessary to attain workability without exceeding the W/Cm limit. Hand work/manual fixed-form methods may necessitate use of a 7-bag mix, however mixes with a cement content above 7-bag will not be allowed.

Batch tickets will be required with every load delivered to the jobsite so that the Contractor/Foreman and Engineer can verify the W/Cm ratio. Tickets shall clearly indicate the W/Cm ratio, or indicate the individual weights (in pounds) of mix water, aggregate free moisture, cement, and fly ash such that the W/Cm ratio can be quickly determined in the field. If possible, indicate the amount of water that can be added on-the-job on each batch ticket.

The Contractor shall conduct frequent moisture testing of the aggregates at the plant/stockpile location. Immediately prior to each day's pour, determine the fine and coarse aggregate moisture content(s). During each pour (unless measured/monitored automatically by the plant), determine fine aggregate moisture content at half-hour intervals (one test every one-half hour) or every-other truck load, whichever interval is longer. Utilize moisture content test results to adjust the batch weights such that the targeted W/Cm ratio is maintained and not exceeded.

Ready-mix trucks if utilized shall accurately measure water (in gallons, pounds or other units if appropriate). Sight-glass type measurement is acceptable, however each truck to be used on the project shall be field calibrated prior to the first use/pour. Any and all water added (in-transit or on the job) shall be recorded on the batch ticket. Sight-glass gauge readings shall be logged by the Contractor prior to adding water (from the truck's tank), and after each addition of water. All wash water shall be removed from the truck/drum prior to loading.

Contractor and the concrete pavement subcontractor shall hold a pre-pour meeting arranged by the Engineer, at least one week prior to each substantial pour.

Comply with all other requirements for concrete pavement per Section 11 of the Standard Specifications.

{SC 41} COLORED CONCRETE CROSSWALKS; *Add the following supplemental information to this section:*
Colored Concrete Crosswalks which are not within mainline slip-formed paving areas shall be constructed via normal manual fixed-form methods.

{(NEW) Special Condition} *Add the following new section:*
{SC 70} STORM SEWER 12" SICPPP – WRAPPED TRENCH (Std. Spec .Ch. 6)
Construct Storm Sewer 12" SICPPP – Wrapped Trench in accordance with the Standard Specifications and plan details as referenced below:

- The trench and dimensions shall comply with the Typical Trench Section as shown on the Storm Sewer Details sheet, Page 169 of 285.
- Geotextile Fabric shall comply with the Pipe Underdrain Detail (Type DF Schedule A, 12" minimum overlap, etc.) as shown on the Storm Sewer Details sheet, Page 168 of 285. Fabric shall completely envelope the trench bedding/cover material.
- Bedding and cover material shall comply with the Pipe Underdrain Detail as shown on the Storm Sewer Details sheet, Page 168 of 285.

The top of the trench/fabric shall be at the same elevation as the proposed subgrade, thus the 'height' of the trench (cover material, fabric, etc.) will vary.

Storm Sewer 12" SICPPP – Wrapped Trench shall be measured per Lineal Foot, in accordance with Section 6 of the Standard Specifications. Payment shall be made at the Contract Unit Price and said compensation shall be considered full compensation for all work and materials as described or implied herein (including bedding/cover material, fabric, etc.) and in accordance with the Standard Specifications.

{(NEW) Special Condition} *Add the following new section:*
{SC 71} CONNECT CATCH BASIN TO EXISTING STORM SEWER (Std. Spec .Ch. 6)
Storm sewer work on W. 3rd Street requires that a new Catch Basin (# 21B) be installed onto an existing storm sewer. The existing storm sewer is 18-inch SICPP with stone bedding and cover. Connecting a new CB to this existing pipe may require cutting and removing a piece of the SICPP such that the new CB can be slid onto this existing pipe and positioned to accomplish proper pipe seals. If this is not possible then an additional length of SICPP may be removed to provide room for the new CB and said pipe shall be relayed or replaced, and reconnected to the existing 18" SICPP to remain (requires a band type coupler/ connection to the existing 18-Inch SICPP, new bedding/cover material, etc.). Mortar/concrete pipe seals at the new CB are incidental to the structure. All work shall comply with pertinent sections of the Standard Specifications.

Connect Catch Basin to Existing Storm Sewer shall be measured as a single unit of work, per Lump Sum. Payment shall be made at the Contract Unit Price and said compensation shall be considered full compensation for all work and materials as described or implied herein and in accordance with the Standard Specifications.

{(NEW) Special Condition} *Add the following new section:*
{SC 72} CONCRETE CRADLE (Std. Spec .Ch. 6)
Where indicated on the Plans or required by the Engineer, construct a Concrete Cradle where large storm sewers cross sanitary sewers with minimal clearance between the sewer pipes. Concrete Cradles shall be constructed as shown on the Concrete Cradle Detail. Concrete Cradles will be measured per Each successfully installed. Payment at the contract unit price shall be considered full compensation for all excavation, forming, materials (concrete, reinforcement, insulation, grout, etc.), installation, staging/downtime/delay, and disposal of waste along with all labor, tools, equipment and incidentals necessary to complete this work.

{(NEW) Special Condition} *Add the following new section:*
{SC 73} SPECIAL SLOPED MH CHANNEL (Std. Spec .Ch. 20)
Where indicated on the Plans or required by the Engineer, Special Sloped Channel(s) are required within select sanitary manholes to provide a smooth flowpath without a vertical drop. A Special Sloped Channel will utilize PVC pipe, fittings, grout, steel ties, etc. as shown on the details. Special Sloped Channels will be measured per Each, per each channel successfully installed. Payment at the contract unit price shall be considered full compensation for all materials, installation and incidentals necessary to complete this work.

DETAILS

The following detailed drawings shall be added to provide additional information for pertinent construction items of work, as described below:

- 'Insulation Detail': These detail drawings indicate the vertical location at building doors/entrances (i.e. not sewer insulation) of the proposed 2-inch Polystyrene Insulation Board. This insulation shall be required where building entrances/doors abut the right-of-way/sidewalk. Locations where said insulation is required are shown on the Pavement Grades plan sheets, Page 231 through 235 of 285, (PG1 through PG5), and listed on Page 188 of 285, (MQ2).
- 'Concrete Cradle Detail': This detail drawing indicates how to construct the concrete cradle, which is required where large storm sewers cross sanitary sewers with minimal clearance between the sewers. The Concrete Cradle is required/noted on Page 220 of 285, (PP9).

PLAN SHEETS

[General Information] *The following information is provided as general information to revise, correct, supplement or add to the information shown on pertinent plan sheets, as described below:*

- On Page 178 of 285, (Concrete Entrance, Concrete Curb & Gutter, and Concrete Sidewalk Details), the dimension of the curb head, 'H', for Reject Curb & Gutter shall be 6" typical, unless otherwise shown on the plans.
- Gas mains shown in the plan views of various plan sheets do not indicate the sizes or wall material of the pipe. Sizes of the distribution mains within the project limits typically include 2" and 3", polyethylene and/or steel wall material, however the existing mains along Chestnut Avenue (7th to 1st), and 5th Street (Central to Chestnut) are 6-inch steel.
- On Pages 212 & 221 of 285, (PP1 & PP10), at the SE corner of 6th & Chestnut, Storm MH #3 will be relocated to the north to provide clearance between a power pole and the proposed storm sewer from CB #3A to MH #3. This change does not affect any quantities or work items. Revised plan sheets will be issued to the awarded Contractor prior to construction.
- On Page 215 of 285, (PP4), at the SW corner of 2nd & Chestnut, the replacement of the north Storm Lateral for the U.S. Post Office will be extended up to the existing pedestrian ramp. This work will require additional lateral pipe and a bend, along with careful/hand excavation to avoid damaging the ramp while replacing a known damaged lateral pipe. This work will be measured and paid for in accordance with the specifications as Storm Sewer 6" PVC.
- On Page 215 of 285, (PP4), along the west right-of-way at the U.S. Post Office property, notes on the plan state 'Remove Curb'. This curb is integral to the sidewalk and will be removed with the sidewalk. This work will be measured and paid for in accordance with the specifications as 'Remove Concrete Sidewalk and Driveways', per SY.
- On Page 219 of 285, (PP8), When installing the proposed storm sewer between CB #25A and MH #25, the Contractor shall hold/secure the base of the existing power pole (owned by Marshfield Utilities) to prevent movement of said pole. If the pole requires adjustment (move to fit behind the proposed curb) this shall be done by Marshfield Utilities prior to installation of the storm sewer.

- On Page 227 of 285, (LT2), the location of the traffic signal loop detector pull box (and loop) shall be changed to STA 30+80, 5.5' RT. This work will require additional lengths of conduit, measured and paid for in accordance with the specifications as Nonmetallic Conduit, 2".
- On Pages 229 & 230 of 285, (LT4 & LT5), existing underground electric lines are not shown in the plan views. These existing lines provide power to Central Avenue traffic signals and/or street lighting, are to remain in service without interruption. The Contractor shall exercise extreme care when excavating near these existing lines for various operations (street light bases, conduit, etc.).
- On Pages 240 through 242 of 285, (SN5 through SN7), existing underground electric lines are not shown in the plan views. These existing lines provide power to Central Avenue traffic signals and/or street lighting, are to remain in service without interruption. The Contractor shall exercise extreme care when installing sign posts near these existing lines.

[Revisions] *Omit the following plan sheets and replace them with the revised sheets (noted on the sheets as "Revised 3/19/13, Addendum No. 1"), including:*

- Page 187 of 285, (MQ1), Storm Sewer Structure Table. Added Structure #21B, as shown on the revised plan sheet (218 of 285, (PP7)) as described below.
- Page 218 of 285, (PP7), Plan & Profile w/Storm Sewer. Changes to this sheet include:
  - Added Structure #21B, Catch Basin Type 2 and CB Cover Type D.
  - Changed the size of the Pipe Underdrain east of new Structure #21B to 6-inch (Storm Sewer 6" SICPPP Pipe Underdrain – Wrapped Trench).
  - Added labels to identify 'Abandon Vault' and 'Remove Foundation Wall'.

ITEMS/QUANTITIES

The following work items and/or quantities have been added or revised/corrected to reflect the additions, modifications, revisions and/or corrections addressed herein:

- {Clarification} Items 6-10/6-11/6-12, Storm Sewer 6"/8"/10" PVC include lengths of storm laterals and catch basin leads.
- {Revised Quantity} Item 6-14, Storm Sewer 6" SICPPP Pipe Underdrain – Wrapped Trench.
- {Revised Quantity} Item 6-15, Storm Sewer 8" SICPPP Pipe Underdrain – Wrapped Trench.
- {Added/New Item} 6-27, Connect New Pipe Underdrain to Existing CB, 1 Each.
- {Added/New Item} 6-28, Connect Catch Basin to Existing Storm Sewer, 1 Lump Sum.
- {Added/New Item} 6-29, Concrete Cradle, 1 Each.
- {Revised Quantity} Item 7-3, Catch Basin Type 2.
- {Revised Quantity} Item 8-2, CB Cover Type D.
- {Revised Item Name} Item 10-12, Change name from 'Abandon Water Valve' to 'Remove Water Valve Box'.
- {Added/New Item} 11-5, Concrete Pavement Gap, 1 Each.
- {Added New/ Item} Item 22-3, Nonmetallic Conduit, 3", per LF. **Note that the item numbers of electrical items (22-X) have been renumbered due to this addition.**

ATTACHMENTS (As previously noted)

- Index (for Special Provisions)
- Proposal
- Contract
- Details (2)
- Plan Sheets (2)

****

End of Addendum No. 1

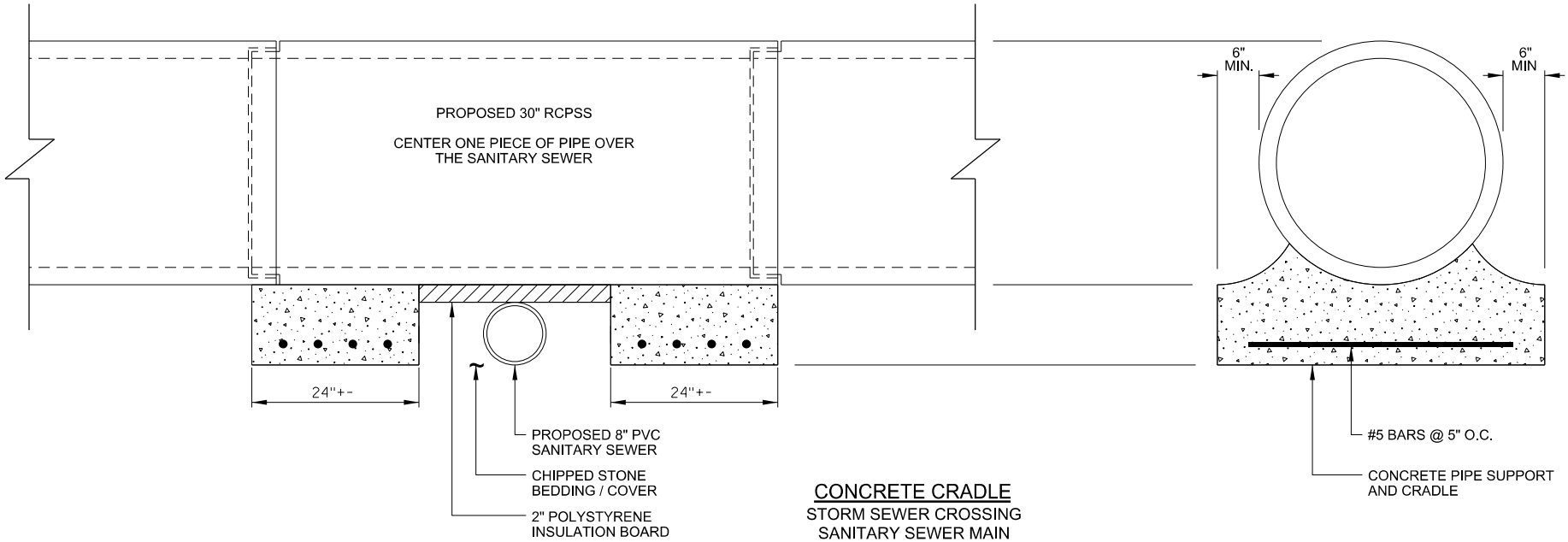

CONCRETE CRADLE

STORM SEWER CROSSING
SANITARY SEWER MAIN
LOW CLEARANCE

HAND EXCAVATE TO TOP OF SANITARY SEWER
HAND EXCAVATE SIDES / BOTTOM OF CONCRETE PIPE SUPPORT / CRADLE
CONCRETE TO BE CURED PRIOR TO PLACEMENT OF RCP
USE NON SHRINK GROUT BETWEEN RCP & CONCRETE CRADLE

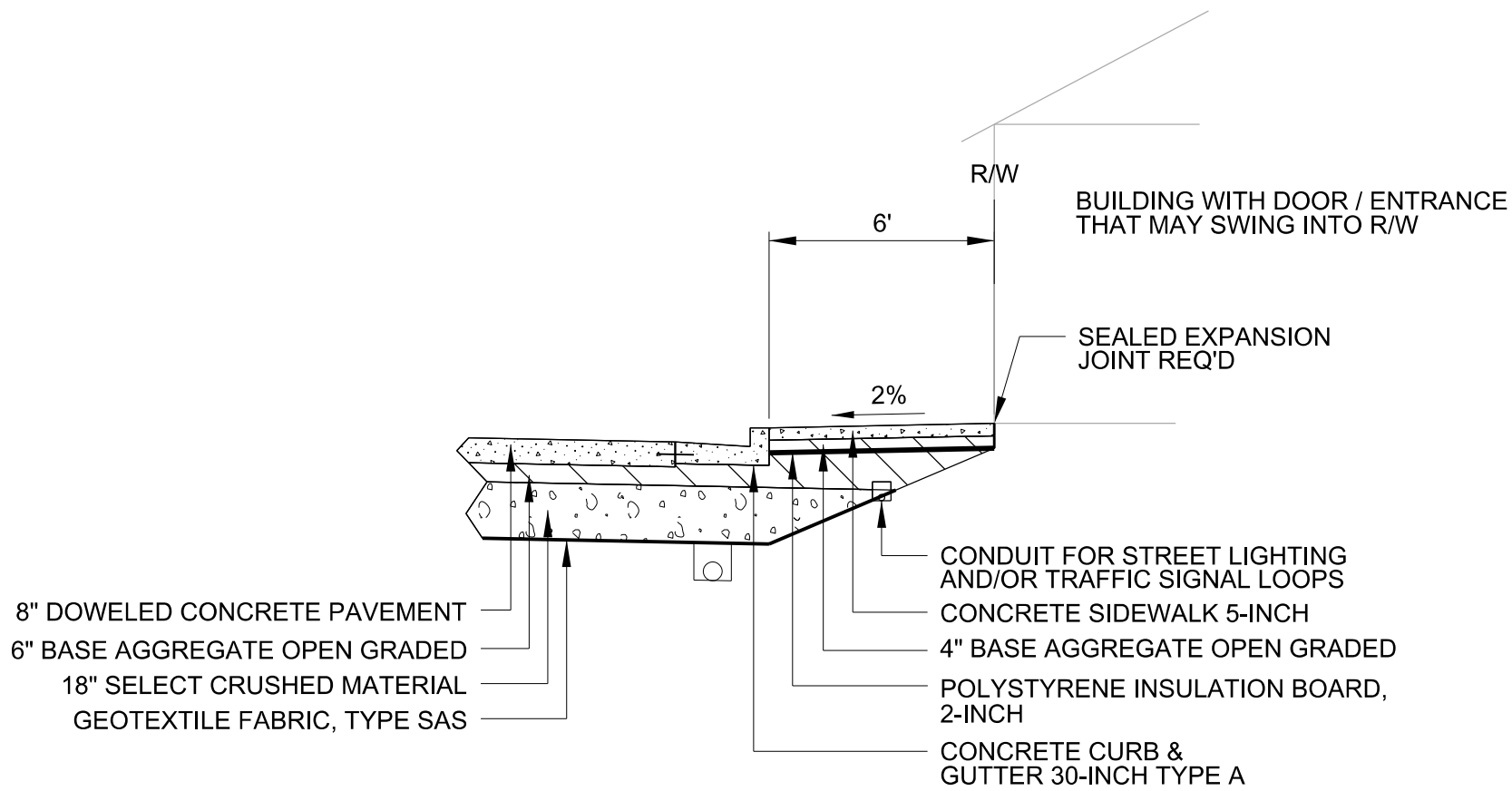

INSULATION DETAIL

CHESTNUT AVENUE
AT DOORS /ENTRANCES

NOTE:
LENGTH / WIDTH / AREA OF INSULATION SHALL BE AS LISTED IN THE INSULATION TABLE (MQ SHEETS)

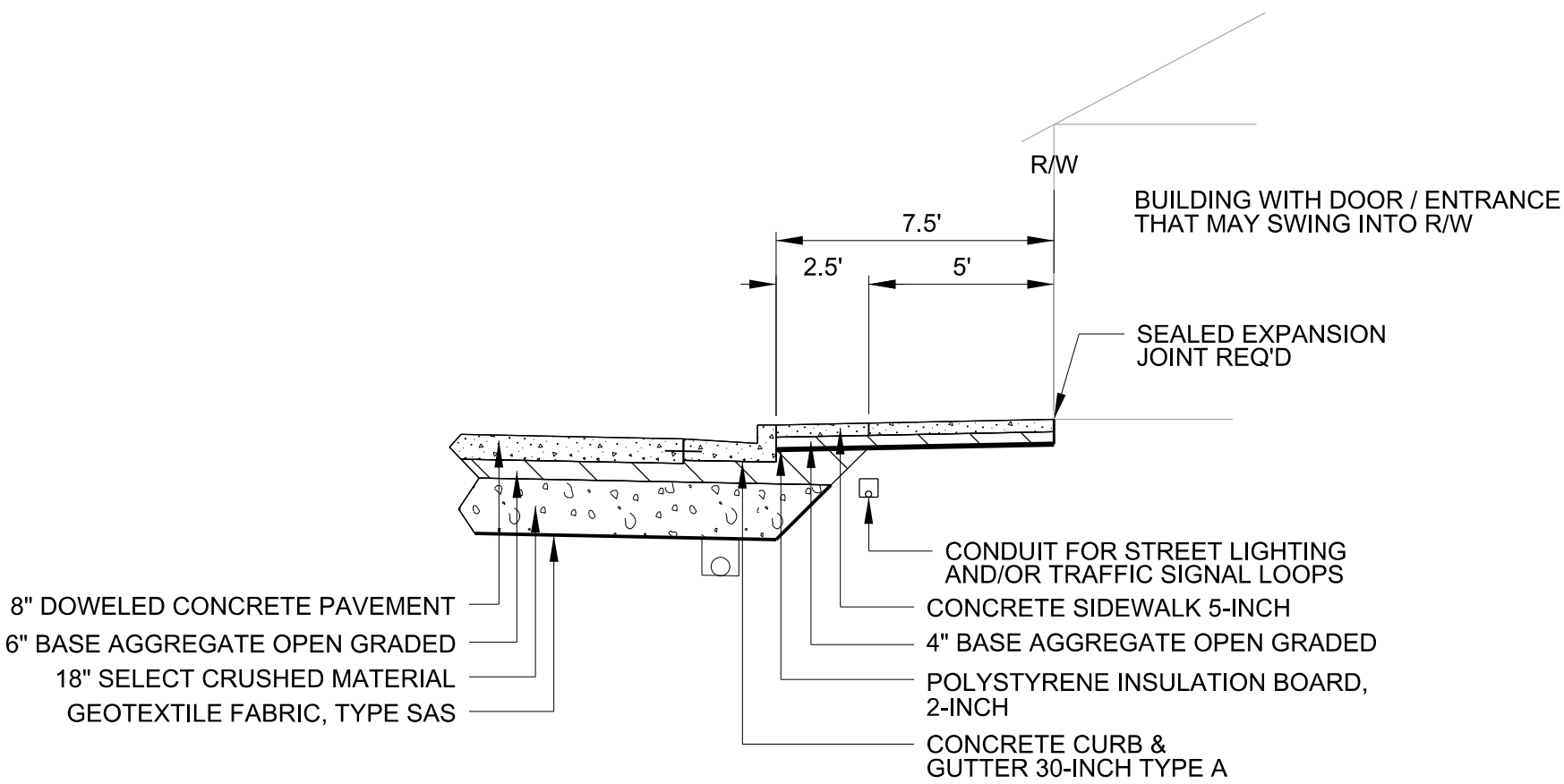

INSULATION DETAIL

CHESTNUT TO CENTRAL
2ND STREET
3RD STREET
4TH STREET
5TH STREET

NOTE:
LENGTH / WIDTH / AREA OF INSULATION SHALL BE AS LISTED IN THE INSULATION TABLE (MQ SHEETS)